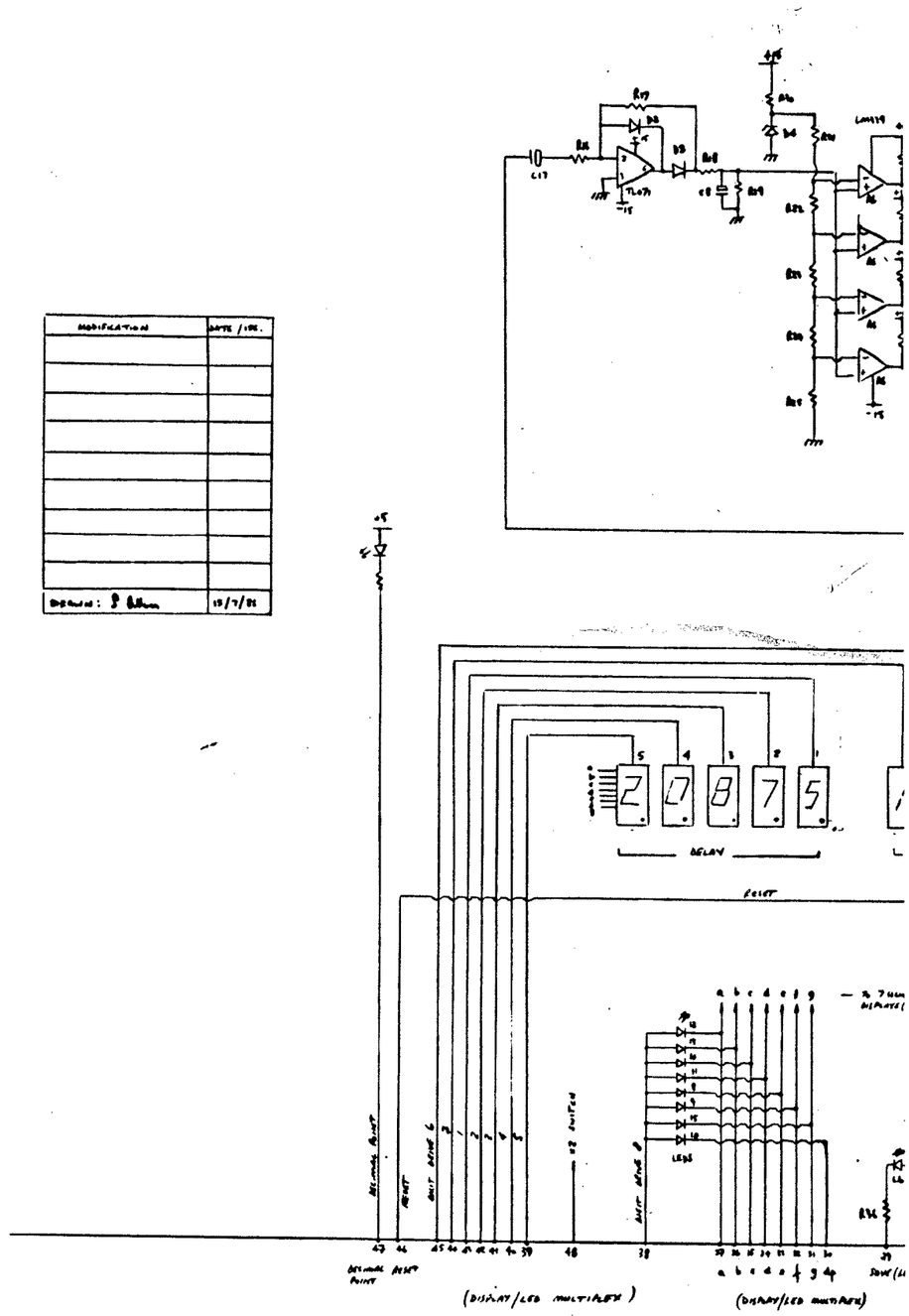

MODIFICATION	DATE / INS.
DRAWN: [illegible]	19/7/81

BDE -2400

DISPLAY & SWITCHING

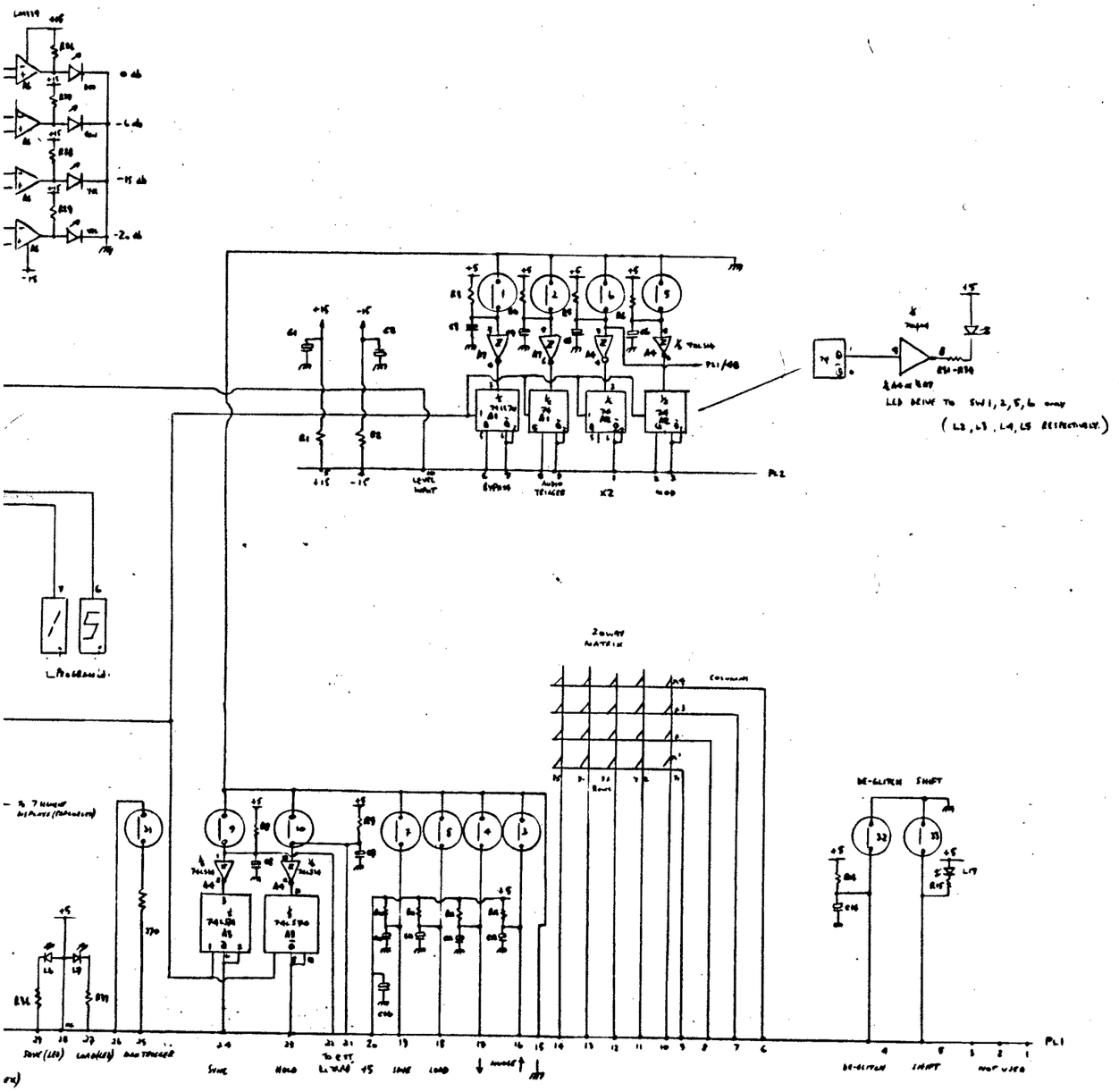

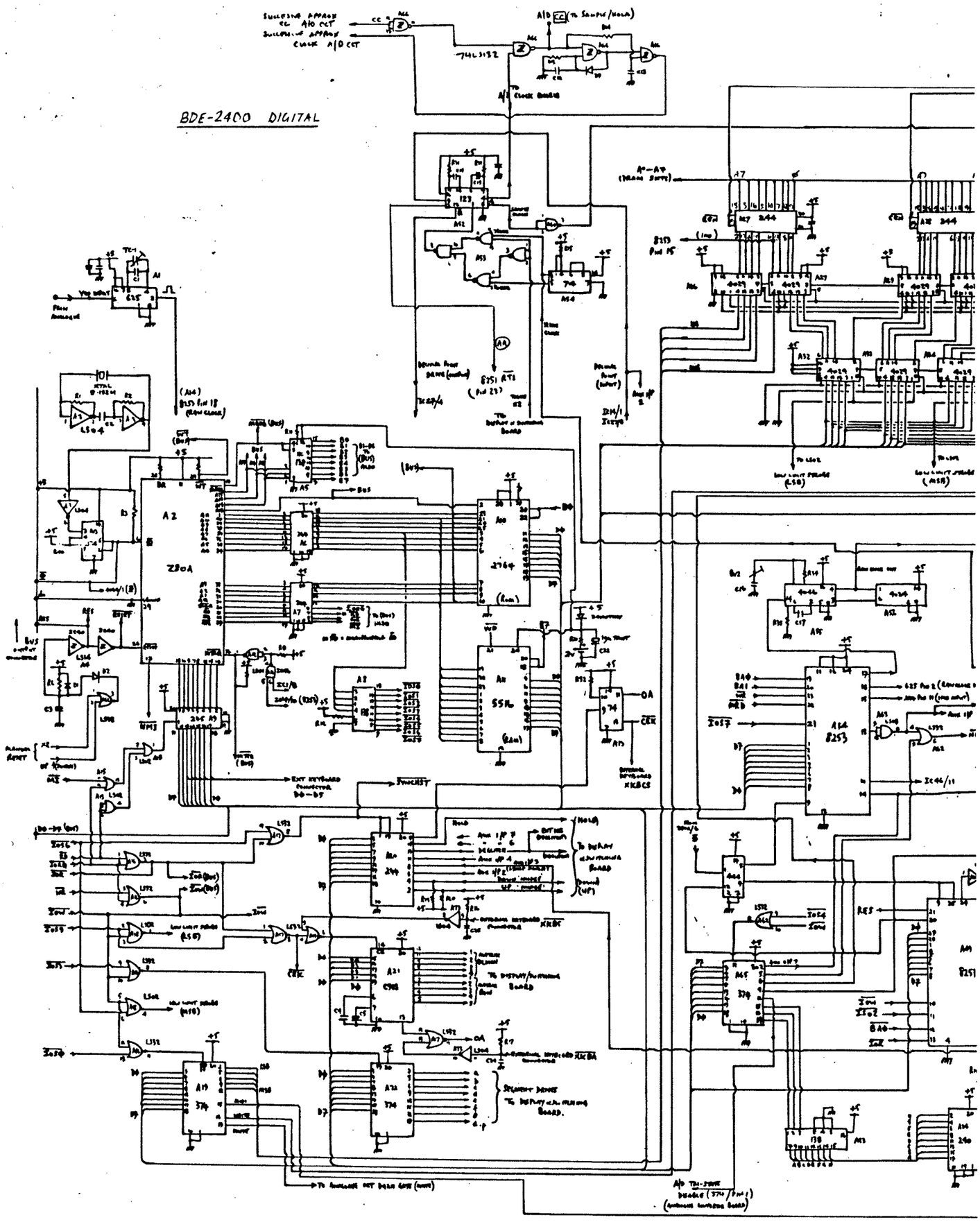
BDE-2400 DIGITAL
74LS132
A2
Z80A
2764
55Hz
8253
8255
8251
74
244
4029
LS04
LS32
LS86
LS00
LS10
LS08
LS74
LS138
LS244
LS245
LS373
LS374
LS244
KEYBOARD
KNOB
DISPLAY/INTENSITY BOARD
SPEAKER DRIVER
To Analogue Out Data Gate (Sheet)
To Sample/Hold
To Clock Board
To Display & Intensity Board
To Display/Intensity Board
To Display & Intensity Board.
To LS02
(LSB)
(MSB)
(Bus)
(Ram)
(Rom)
(Int)
(Hold)
(Up)
(Down)
(Reset)
(Ram Clock)
(Bus Clock)
(Int Clock)
(Sample/Hold)
(Display Enable)
(Intensity Enable)
(Speaker Enable)
(Keyboard Enable)
(Analogue Output Data Gate)
(Analogue Output Data Gate (Sheet))
(Analogue Output Data Gate (Int))
(Analogue Output Data Gate (Hold))
(Analogue Output Data Gate (Up))
(Analogue Output Data Gate (Down))
(Analogue Output Data Gate (Reset))
(Analogue Output Data Gate (Ram))
(Analogue Output Data Gate (Bus))
(Analogue Output Data Gate (Ram Clock))
(Analogue Output Data Gate (Bus Clock))
(Analogue Output Data Gate (Int Clock))
(Analogue Output Data Gate (Sample/Hold))
(Analogue Output Data Gate (Display Enable))
(Analogue Output Data Gate (Intensity Enable))
(Analogue Output Data Gate (Speaker Enable))
(Analogue Output Data Gate (Keyboard Enable))
(Analogue Output Data Gate (Reset))
(Analogue Output Data Gate (Hold))
(Analogue Output Data Gate (Up))
(Analogue Output Data Gate (Down))
(Analogue Output Data Gate (Int))
(Analogue Output Data Gate (Bus))
(Analogue Output Data Gate (Ram))
(Analogue Output Data Gate (Ram Clock))
(Analogue Output Data Gate (Bus Clock))
(Analogue Output Data Gate (Int Clock))
(Analogue Output Data Gate (Sample/Hold))
(Analogue Output Data Gate (Display Enable))
(Analogue Output Data Gate (Intensity Enable))
(Analogue Output Data Gate (Speaker Enable))
(Analogue Output Data Gate (Keyboard Enable))
(Analogue Output Data Gate (Reset))
(Analogue Output Data Gate (Hold))
(Analogue Output Data Gate (Up))
(Analogue Output Data Gate (Down))
(Analogue Output Data Gate (Int))
(Analogue Output Data Gate (Bus))
(Analogue Output Data Gate (Ram))
(Analogue Output Data Gate (Ram Clock))
(Analogue Output Data Gate (Bus Clock))
(Analogue Output Data Gate (Int Clock))
(Analogue Output Data Gate (Sample/Hold))
(Analogue Output Data Gate (Display Enable))
(Analogue Output Data Gate (Intensity Enable))
(Analogue Output Data Gate (Speaker Enable))
(Analogue Output Data Gate (Keyboard Enable))
(Analogue Output Data Gate (Reset))
(Analogue Output Data Gate (Hold))
(Analogue Output Data Gate (Up))
(Analogue Output Data Gate (Down))
(Analogue Output Data Gate (Int))
(Analogue Output Data Gate (Bus))
(Analogue Output Data Gate (Ram))
(Analogue Output Data Gate (Ram Clock))
(Analogue Output Data Gate (Bus Clock))
(Analogue Output Data Gate (Int Clock))
(Analogue Output Data Gate (Sample/Hold))
(Analogue Output Data Gate (Display Enable))
(Analogue Output Data Gate (Intensity Enable))
(Analogue Output Data Gate (Speaker Enable))
(Analogue Output Data Gate (Keyboard Enable))
(Analogue Output Data Gate (Reset))
(Analogue Output Data Gate (Hold))
(Analogue Output Data Gate (Up))
(Analogue Output Data Gate (Down))
(Analogue Output Data Gate (Int))
(Analogue Output Data Gate (Bus))
(Analogue Output Data Gate (Ram))
(Analogue Output Data Gate (Ram Clock))
(Analogue Output Data Gate (Bus Clock))
(Analogue Output Data Gate (Int Clock))
(Analogue Output Data Gate (Sample/Hold))
(Analogue Output Data Gate (Display Enable))
(Analogue Output Data Gate (Intensity Enable))
(Analogue Output Data Gate (Speaker Enable))
(Analogue Output Data Gate (Keyboard Enable))
(Analogue Output Data Gate (Reset))
(Analogue Output Data Gate (Hold))
(Analogue Output Data Gate (Up))
(Analogue Output Data Gate (Down))
(Analogue Output Data Gate (Int))
(Analogue Output Data Gate (Bus))
(Analogue Output Data Gate (Ram))
(Analogue Output Data Gate (Ram Clock))
(Analogue Output Data Gate (Bus Clock))
(Analogue Output Data Gate (Int Clock))
(Analogue Output Data Gate (Sample/Hold))
(Analogue Output Data Gate (Display Enable))
(Analogue Output Data Gate (Intensity Enable))
(Analogue Output Data Gate (Speaker Enable))
(Analogue Output Data Gate (Keyboard Enable))
(Analogue Output Data Gate (Reset))

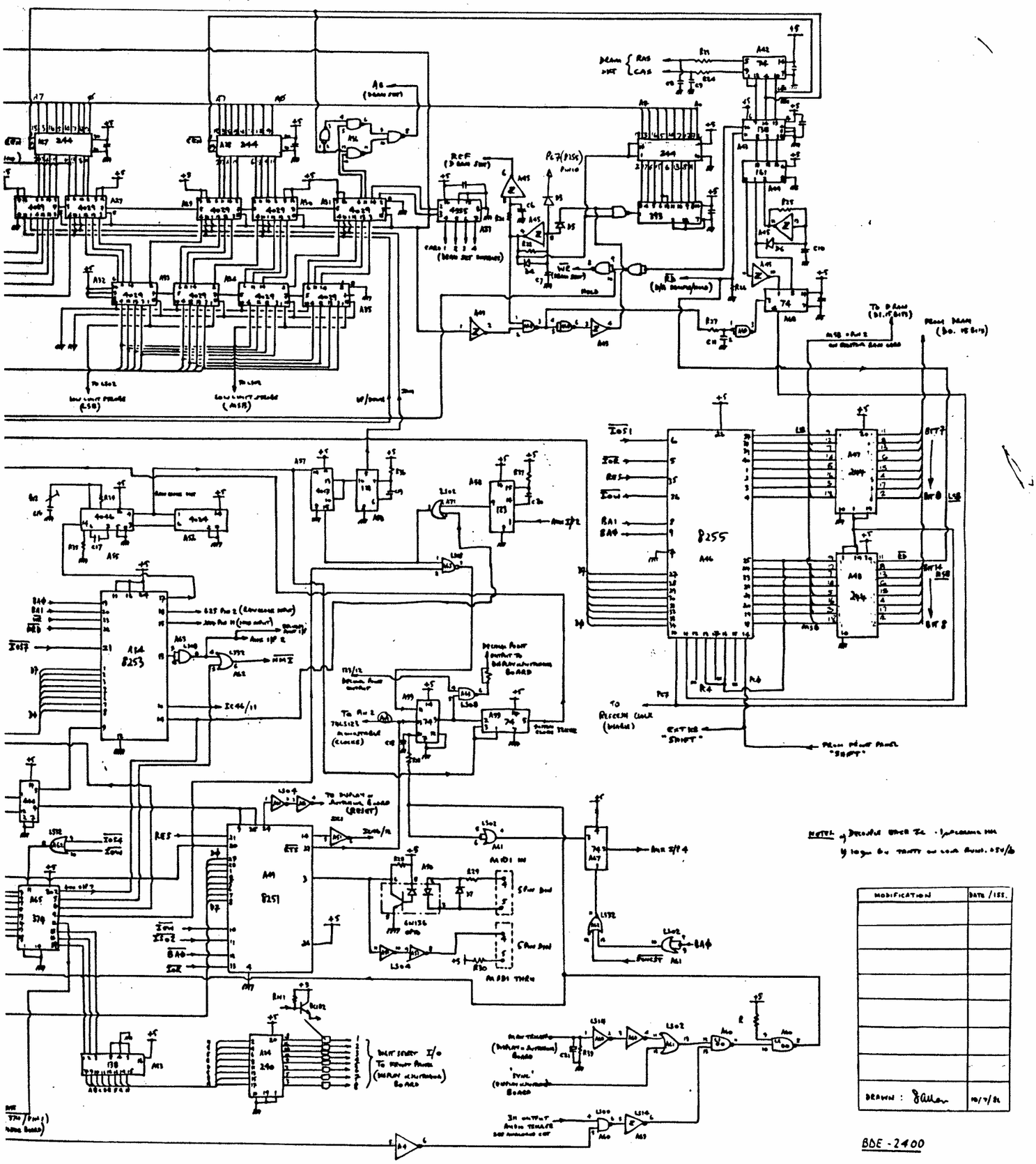
8255
8253
8251
MODIFICATION
DATE / ISS.
DRAWN :
BDE - 2400

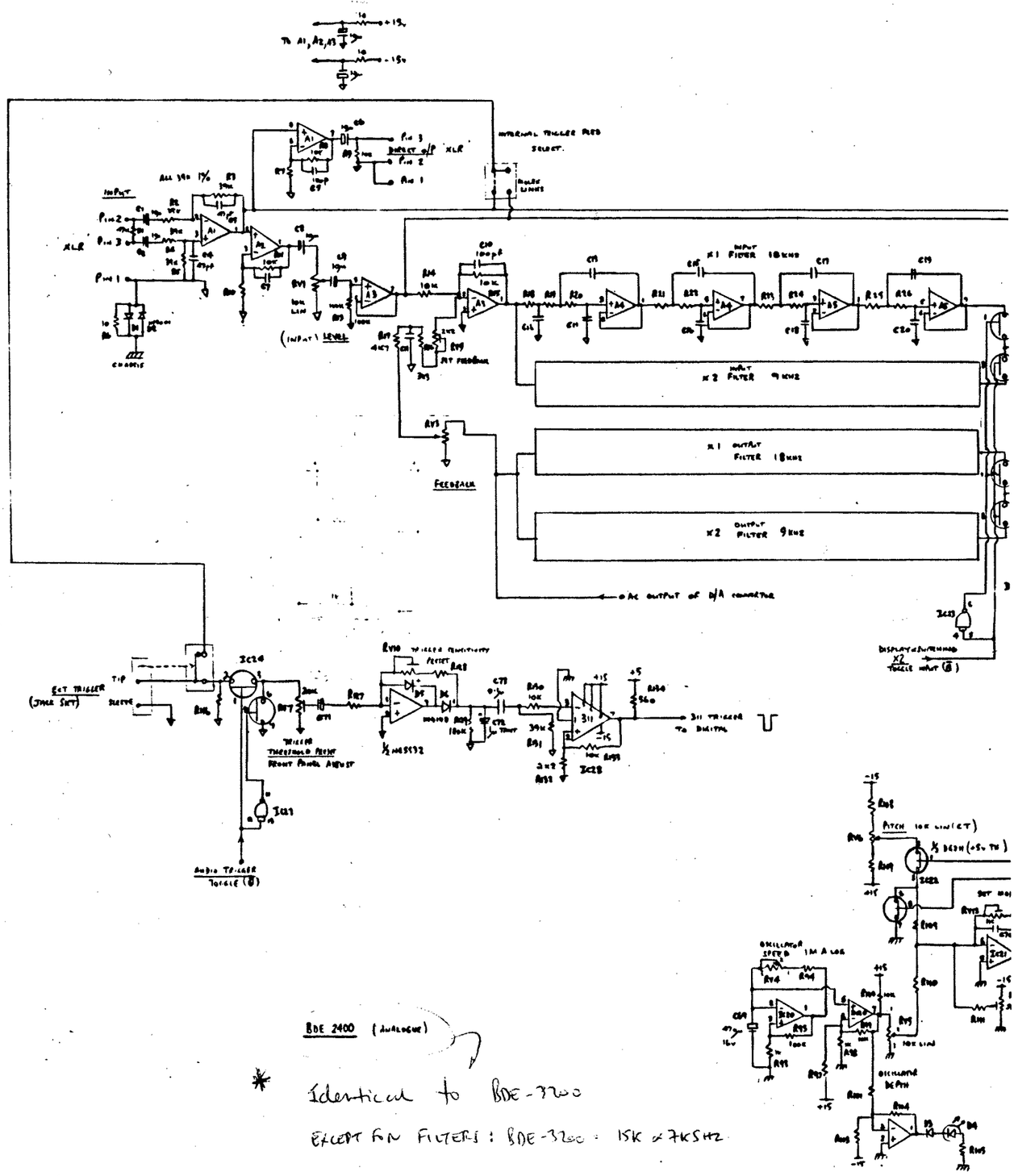

BDE 2400 (ANALOGUE)

* Identical to BDE-3200

EXCEPT FOR FILTERS: BDE-3200 = 15K & 7KSHZ

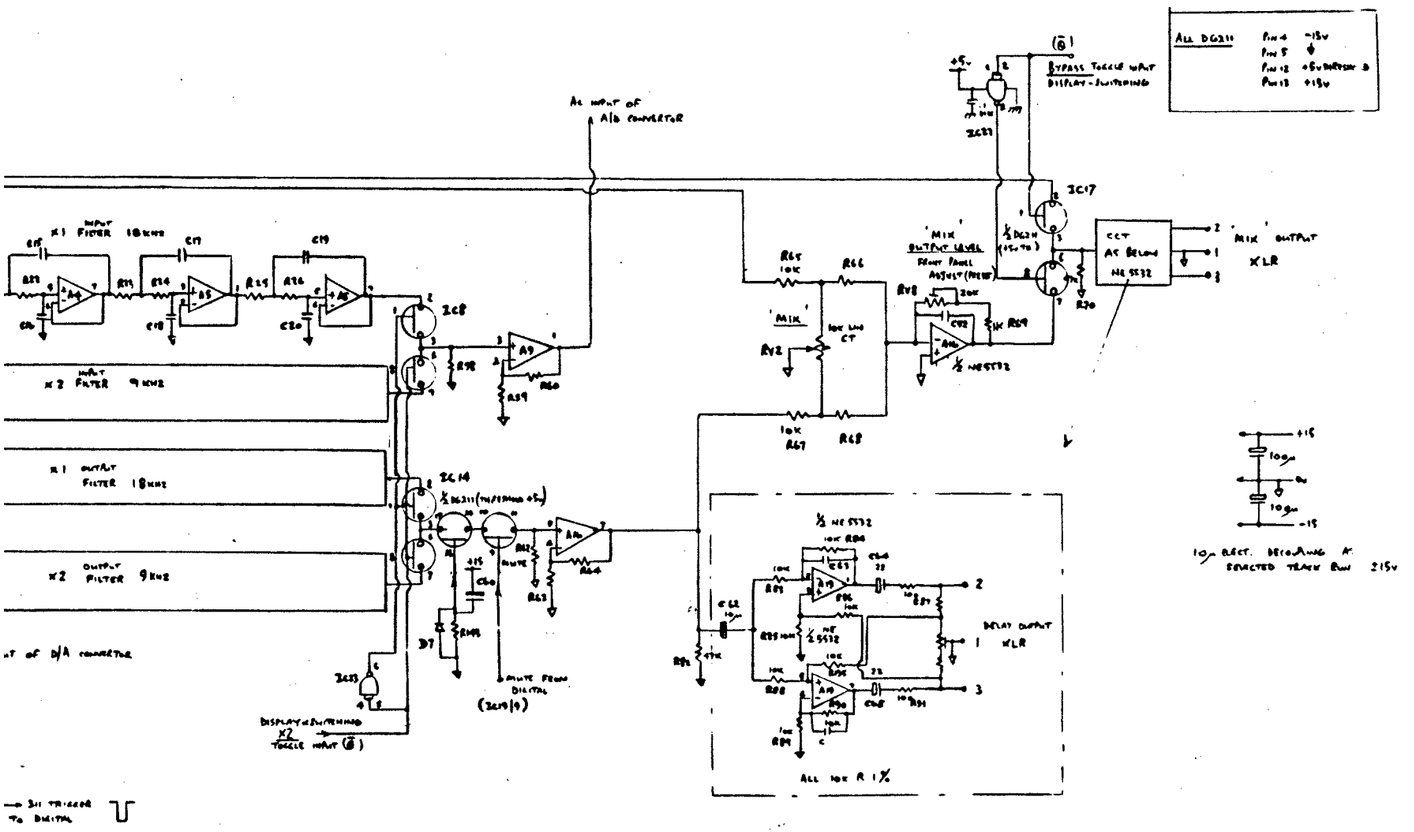

Modification	Date/no.
Drawn: J Allen	14/7/14